The Use of Screening Colonoscopy for Patients Cared for by the Department of Veterans Affairs

Hashem B. El-Serag, MD, MPH; Laura Petersen, MD, MPH; Howard Hampel, MD, PhD; Peter Richardson, PhD; Gregory Cooper, MD

Background: Medicare data indicate an increase in colorectal cancer (CRC) screening using colonoscopy and a decline in fecal occult blood testing, flexible sigmoidoscopy, and double-contrast barium enema. Because of differences in the delivery of health care, this trend in use of colonoscopy in fee-for-service settings might not be paralleled in the Department of Veterans Affairs (VA).

Methods: National inpatient and outpatient VA databases were searched for codes indicative of colonoscopy, flexible sigmoidoscopy, fecal occult blood testing, and double-contrast barium enema during fiscal years 1998 to 2003 among VA users aged 49 to 75 years.

Results: The frequency of tests for CRC screening increased from 432 778 in 1998 to 1 179 764 in 2003. Of those who were screened, only the proportion of subjects screened with fecal occult blood testing increased from 81.7% to 90.4%, while screening colonoscopy declined from 5.7% to 4.7%; flexible sigmoidoscopy declined from 8.3% to 3.6%; and double-contrast barium enema declined from 4.1% to 1.3%. The total use of screening colonoscopy procedures increased from 24 955 in 1998 to 55 199 in 2003, but the proportion of colonoscopy procedures performed for CRC screening purposes increased only slightly from 34.3% to 38.4%. In regression models adjusting for age, race, and sex, there was no consistent secular trend in the likelihood of undergoing screening colonoscopy for patients cared for in the VA health care system.

Conclusions: Colorectal cancer screening has dramatically increased in the VA, but unlike in other practice settings, fecal occult blood testing is the dominant mode of screening. Although screening colonoscopy more than doubled in frequency, it constitutes a small proportion of the total CRC screening procedures used in the VA health care setting.

Arch Intern Med. 2006;166:2202-2208

COLORECTAL CANCER (CRC) is one of the most common causes of cancer deaths in men and women. Although CRC is potentially preventable, it is estimated that 145 290 persons in the United States were diagnosed as having CRC and that 56 290 died from the disease in 2005.[1]

CME course available at www.archinternmed.com

For editorial comment see page 2177

Author Affiliations: Houston Center for Quality of Care and Utilization Studies and Gastroenterology at the Michael E. DeBakey VA Medical Center and Baylor College of Medicine, Houston, Tex (Drs El-Serag, Petersen, Hampel, and Richardson); and Case Western Reserve University, Cleveland, Ohio (Dr Cooper).

The past 2 decades have witnessed important advances in our knowledge of the potential benefits of CRC screening. Fecal occult blood testing (FOBT) followed by colonoscopy in those with a positive test result was shown to reduce CRC mortality by 15% to 33% in several randomized controlled trials.[2-5] Follow-up results[6] from 1 of these trials showed that FOBT also reduces CRC incidence. In addition, case-control studies[7,8] have shown that sigmoidoscopy is associated with a 59% to 80% reduction in CRC mortality in the distal colon and rectum. Furthermore, the National Polyp Study,[9] a cohort study, showed that colonoscopic polypectomy is associated with a 76% to 90% reduction in CRC incidence compared with 3 reference populations.

In 1997, evidence-based CRC screening guidelines were published and endorsed by all the professional gastroenterology societies and the American Cancer Society,[10] and updated in 2003.[11] For average-risk individuals, beginning at the age of 50 years, the guidelines recommend a choice of 5 CRC screening methods: annual FOBT, flexible sigmoidoscopy (FS) every 5 years, annual FOBT combined with FS, colonos-

©2006 American Medical Association. All rights reserved.

Downloaded From: http://archinte.jamanetwork.com/ on 01/24/2017

copy every 10 years, or double-contrast barium enema (DCBE) every 5 years.

Because it is the most invasive and costly approach and because it is usually performed by specialists, until recently, colonoscopy was primarily used to screen high-risk individuals, for diagnostic purposes, or to follow up on abnormal results of other screening tests. However, there has been increasing interest in using colonoscopy for screening purposes because of its ability to examine the entire colon and to remove polyps at the same session. The guideline for CRC screening issued by the American College of Gastroenterology recommends colonoscopy as the best available CRC screening strategy.[12]

In 2001, Medicare enacted coverage of screening colonoscopy in beneficiaries at average risk for the development of CRC. Medicare coverage decisions have an influence far beyond the Medicare population because such decisions often drive private insurer decisions. Previous studies[13-17] found a large increase in colonoscopy use for CRC screening after Medicare coverage was enacted. Studies[16,17] have also shown a concomitant decline in the use of FOBT and DCBE.

It is unclear whether the national trends in the use of screening colonoscopy have affected the Department of Veterans Affairs (VA), which is the single largest health care provider in the United States. The frequency and temporal trends of CRC screening modalities in the VA are unknown and, because of organizational and financing differences, may differ from those of other health care systems.[18] The VA is the largest integrated health care system in the United States, with a medical care budget of $23.4 billion in fiscal year 2005.[19] The VA health care system cares for its enrollees in VA Medical Centers and VA Community-Based Outpatient Clinics, which employ salaried physicians. As opposed to Medicare fee-for-service financing, there are no direct financial incentives for the use of colonoscopy procedures in the VA. By using national-level data, we investigated whether colonoscopy use increased disproportionately in the VA system and changes in rates of FS, DCBE, and FOBT use between October 1, 1998, and September 30, 2003.

METHODS

National inpatient and outpatient VA databases were searched for codes indicative of colonoscopy, FS, FOBT, and DCBE recorded during fiscal years 1998 to 2003. We included procedures for only VA users aged 49 to 75 years. These databases included VA Outpatient Clinic files, which contain information on outpatient clinic visits and procedures coded according to *Current Procedural Terminology*; each clinic stop could be associated with up to 15 diagnoses or procedures. We also used the VA Patient Treatment File, which contains hospital discharge records and up to 10 diagnostic codes, 5 operating room procedures, and 32 nonoperating room procedures coded according to the *International Classification of Diseases, Ninth Revision, Clinical Modification*.

The indications for CRC screening tests were classified as screening, diagnosis, or surveillance based on the predefined algorithm in **Figure 1**. All FOBT procedures were designated as screening procedures. Flexible sigmoidoscopy and DCBE were considered diagnostic in the presence of specific conditions recorded within the year before the date of the procedure. They

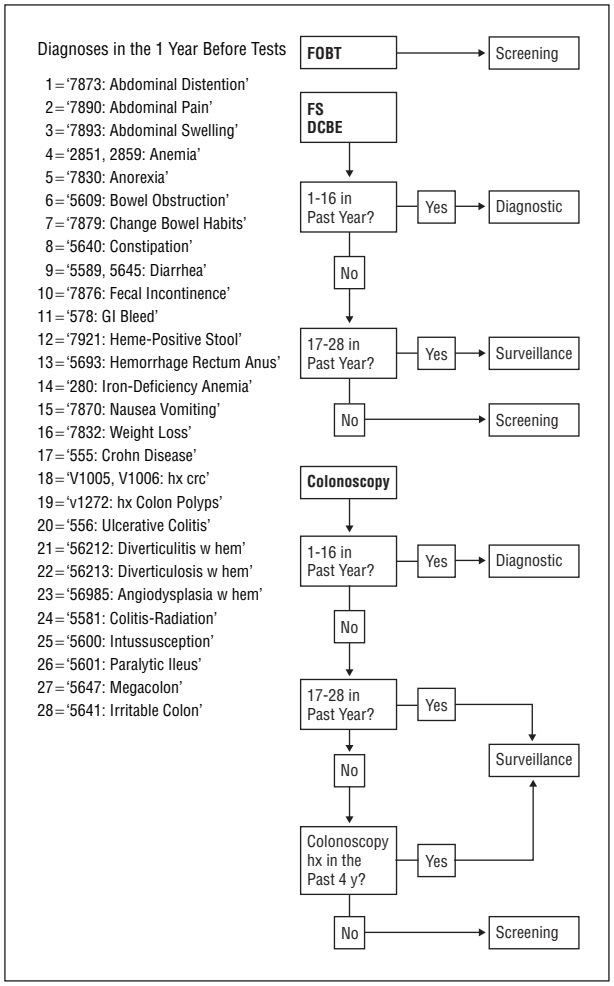

Figure 1. Algorithm to classify the purpose of colorectal cancer (crc) tests: screening, diagnostic, and surveillance. The numbers before each diagnosis signify the *International Classification of Diseases, Ninth Revision, Clinical Modification* codes. DCBE indicates double-contrast barium enema; FOBT, fecal occult blood test; FS, flexible sigmoidoscopy; GI, gastrointestinal; hx, history; and w hem, with hemorrhage.

were considered to be surveillance procedures in the presence of a second set of prespecified conditions (coded as 17-28). The remaining procedures were considered to be screening procedures. Colonoscopy was considered for CRC screening in the absence of conditions associated with diagnostic or surveillance indications and if no colonoscopy had been performed within the past 4 years.

Because of concerns of the accuracy of diagnosis and procedure codes for specifying procedural indications, we also conducted a medical record review study in a subset of colonoscopic procedures nested within the main study cohort to validate and refine the algorithm that was used. A review of procedure, pathology, and progress notes was performed by 2 board-certified gastroenterologist investigators who were blinded to the designated status based on the VA administrative data sets. They categorized indications for procedures as screening, surveillance, or diagnostic. The predictive values of the database algorithm for identifying screening colonoscopy (compared with the medical record as a gold standard) were calculated. We also used the predictive values to perform a sensitivity analysis of the calculated proportions for screening colonoscopy.

The frequencies and proportions of the 4 types of CRC screening procedures, and of unique individuals undergoing these procedures, were calculated for each fiscal year. The tem-

©2006 American Medical Association. All rights reserved.

Downloaded From: http://archinte.jamanetwork.com/ on 01/24/2017

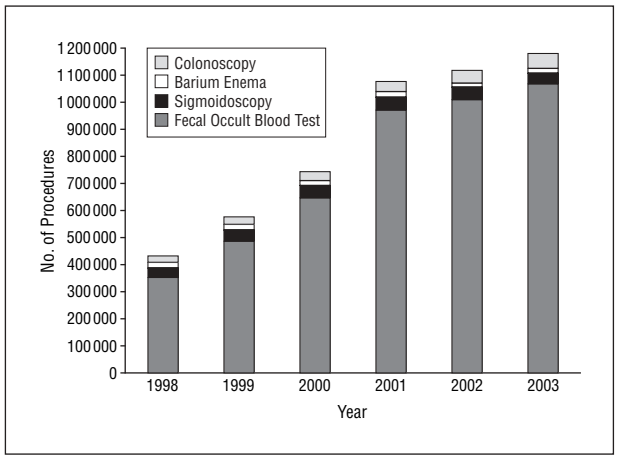

Figure 2. The annual frequency and type of colorectal cancer screening procedures performed at Department of Veterans Affairs facilities between October 1, 1997, and September 30, 2003.

poral changes and potential determinants (age, sex, and race) of screening colonoscopy (vs other CRC screening tests) were examined in unadjusted and adjusted logistic regression analyses. Similar calculations were performed for screening colonoscopy (vs other colonoscopy). Statistical comparisons of these proportions were not performed because of overlapping groups.

RESULTS

A total of 5 125 938 CRC screening tests were performed in 2 402 657 patients for CRC screening between 1998 and 2003, with a mean of 2.13 tests per patient. The volume of procedures increased from 432 778 in 1998 to 1 179 764 in 2003 (**Figure 2**). During that period, the proportion of FOBT use in patients with CRC screening increased from 81.7% to 90.4%, while screening colonoscopy declined from 5.7% to 4.7%; FS declined from 8.3% to 3.6%; and DCBE declined from 4.1% to 1.3% (Figure 2). The mean age for subjects undergoing CRC screening (by any modality) declined slightly over time from a median of 64.0 years in 1998 to 63.2 years in 2003, and declined more for screening colonoscopy, from 64.3 years in 1998 to 62.0 years in 2003. In contrast, the mean age of all VA users did not change during that period (62.6 years in 1998 and 2003).

The mean age of patients undergoing screening with FOBT was higher than for the other modalities, and whites constituted a larger proportion of patients undergoing screening colonoscopy than those undergoing FOBT, FS, or DCBE (**Table 1**). Consistent with the demographics of the VA system, most procedures (97.0%) were conducted in men.

A multivariable logistic regression model indicated that among all CRC screening tests, the use of colonoscopy was independently associated with several factors (**Table 2**). Colonoscopy was positively associated with "other" race and with women (who were approximately 50% more likely to undergo screening colonoscopy than men). A bimodal age distribution was observed, with colonoscopy as the more likely screening modality for persons between the ages of 49 and 55 years and for those 65 years and older than for those between the ages of 55 and 64 years. Although the odds of undergoing colonoscopy were greater from 1999 through 2002 than in 1998, there was no significant difference between 1998 and 2003 (Table 2).

The number of colonoscopy procedures performed each year for any reason increased from 72 471 to 143 860, but the proportion of these used for screening colonoscopy increased slightly from 34.3% in 1998 to 38.4% in 2003 (**Figure 3**). Patients undergoing screening colonoscopy were approximately 2 years younger than those undergoing colonoscopy for other indications (**Table 3**). There were also fewer whites among those undergoing screening colonoscopy than other indications; however, many patients had the race variable uncoded. In a multivariable analysis, the adjusted odds of screening colonoscopy compared with surveillance or diagnosis decreased by approximately 17% between 1998 and 2003 (**Table 4**). Again, a bimodal age distribution was seen in which, among all colonoscopies, a colonoscopy was more likely to be performed for CRC screening purposes in persons aged 49 to 54 and 70 to 75 years (compared with those aged 55-59 and 60-64 years). Black patients were more likely, and members of other racial groups were less likely, to undergo colonoscopy for screening purposes than white patients. Last, women were 37% more likely to undergo a colonoscopy for screening purposes than for other indications.

A total of 303 medical records of unique patients with colonoscopy performed at the Michael E. DeBakey VA Medical Center, between October 6, 1999, and September 30, 2003, were identified at random using a computer-generated algorithm, and reviewed from the national databases (ie, a subset from the main study cohort). Agreement between the 2 reviewers was achieved in 92.0% of cases, and differences were resolved by discussion. We calculated that the algorithm has approximately 70.1% sensitivity and 71.6% specificity to define screening colonoscopy. The findings of medical record review were then applied in a sensitivity analysis to recalculate the estimated annual frequency of screening colonoscopy. Apart from reducing the total number of screening colonoscopies by up to 25%, changing the definition of screening colonoscopy had little effect on the observed trends (**Figure 4**).

COMMENT

We found that CRC screening has dramatically increased between 1998 and 2003. However, in contrast to another report[20] that showed a decline in FOBT and an increase in endoscopic screening over time, FOBT has remained the dominant mode of screening in the VA. In fact, the proportion screened with FOBT has actually increased over time. Although screening colonoscopy more than doubled in frequency, it still constitutes a small proportion of CRC screening. Overall, there was no significant difference in the likelihood of undergoing screening colonoscopy between 1998 and 2003.

For a variety of reasons, colonoscopy has been proposed as the CRC screening test of choice. Fecal occult blood testing has been criticized for its lack of sensitiv-

©2006 American Medical Association. All rights reserved.

Downloaded From: http://archinte.jamanetwork.com/ on 01/24/2017

Table 1. Demographic Features of Veterans Undergoing CRC Screening, Stratified by Type, Between October 1, 1997, and September 30, 2003*

Feature	Screening Colonoscopy (n = 178 853)	FOBT (n = 1 635 364)	DCBE (n = 78 830)	FS (n = 217 327)
Race				
White	105 746 (59.1)	815 582 (49.9)	45 894 (58.2)	118 789 (54.7)
Black	17 934 (10.0)	133 822 (8.2)	10 458 (13.3)	20 358 (9.4)
Other	55 173 (30.8)	685 960 (41.9)	22 478 (28.5)	78 180 (36.0)
Sex				
Male	174 356 (97.5)	1 583 775 (96.8)	76 427 (97.0)	211 824 (97.5)
Female	4497 (2.5)	51 589 (3.2)	2403 (3.0)	5503 (2.5)

Abbreviations: CRC, colorectal cancer; DCBE, double-contrast barium enema; FOBT, fecal occult blood testing; FS, flexible sigmoidoscopy.
*Data are given as number (percentage) of each group. Percentages may not total 100 because of rounding. The mean (SD) age of those undergoing screening colonoscopy was 62.3 (7.6) years; FOBT, 63.9 (7.8) years; DCBE, 62.6 (7.8) years; and FS, 61.8 (7.7) years.

Table 2. Predictors of Screening Colonoscopy Among All CRC Screenings: Results of Multivariate Logistic Regression

Variable	OR (95% CI)	*P* Value
Race		
Black	0.99 (0.97-1.00)	.14
Other	1.50 (1.48-1.51)	<.001
White	1.00	NA
Sex		
Female	1.55 (1.50-1.59)	<.001
Male	1.00	NA
Age at procedure, y		
49-54	1.00	NA
55-59	0.93 (0.92-0.94)	<.001
60-64	0.96 (0.95-0.98)	<.001
65-69	1.14 (1.12-1.15)	<.001
70-75	1.41 (1.39-1.43)	<.001
Fiscal year		
1998	1.00	NA
1999	1.16 (1.14-1.19)	<.001
2000	1.32 (1.29-1.34)	<.001
2001	1.46 (1.43-1.48)	<.001
2002	1.24 (1.22-1.26)	<.001
2003	1.01 (0.99-1.02)	.45

Abbreviations: CI, confidence interval; CRC, colorectal cancer; NA, data not applicable; OR, odds ratio.

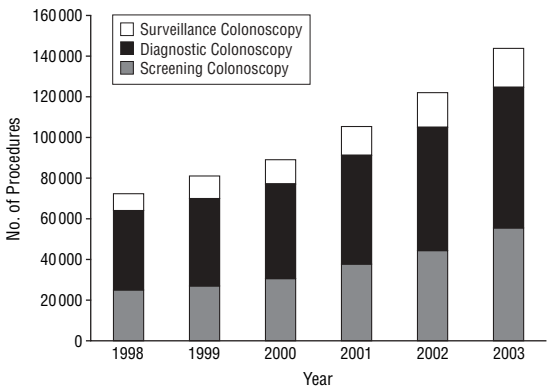

Figure 3. The annual frequency and indications of colonoscopy performed at Department of Veterans Affairs facilities between October 1, 1997, and September 30, 2003. The indications for the procedures were defined according to the algorithm in Figure 1.

Table 3. Demographic Features of Veterans Undergoing Colonoscopy, Stratified by Indication, Between October 1, 1997, and September 30, 2003*

Variable	Screening Colonoscopy (n = 178 853)	Diagnostic Colonoscopy (n = 191 948)	Surveillance Colonoscopy (n = 51 721)
Race			
White	105 746 (59.1)	121 263 (63.2)	34 416 (66.5)
Black	17 934 (10.0)	27 453 (14.3)	5273 (10.2)
Other	55 173 (30.8)	43 232 (22.5)	12 032 (23.3)
Sex			
Male	174 356 (97.5)	185 701 (96.7)	50 769 (98.2)
Female	4497 (2.5)	6247 (3.3)	952 (1.8)

*Data are given as number (percentage) of each group. Percentages may not total 100 because of rounding. The mean (SD) age of those undergoing screening colonoscopy was 62.3 (7.6) years; diagnostic colonoscopy, 63.2 (7.9) years; and surveillance colonoscopy, 64.3 (7.3) years.

ity,[21] especially if performed on rectal examination and not serially, and for its lack of specificity.[22] In addition, CRC screening methods that focus on the distal colon, such as sigmoidoscopy, will fail to detect proximal adenomas and cancers. Also, many patients with proximal lesions do not have an index lesion in the distal colon that would lead to a colonoscopy.[23,24] Prior studies, including population-based analyses,[25,26] have reported an increase in the occurrence of proximal CRC over time, which may be because of a relative decrease in the incidence of left-sided CRC. In addition, a study[27] of Medicare beneficiaries diagnosed as having CRC during 1987 reported that the proportion of individuals with right-sided CRC increased with age.

Presumably in part because of recognition of the superiority of colonoscopy in detecting polyps and the limitations of other screening procedures, reports from the Medicare population[17] and endoscopic databases[13-15] have all documented temporal increases in colonoscopy as a screening modality. The predominant use of FOBT for CRC screening in the VA contrasts to the findings of Medicare

©2006 American Medical Association. All rights reserved.

Downloaded From: http://archinte.jamanetwork.com/ on 01/24/2017

Table 4. Predictors of Screening Colonoscopy Among All Colonoscopy Procedures: Results of Multivariate Logistic Regression

Variable	OR (95% CI)	*P* Value
Race		
Black	1.30 (1.27-1.32)	<.001
Other	0.75 (0.74-0.76)	<.001
White	1.00	NA
Sex		
Female	1.37 (1.32-1.42)	<.001
Male	1.00	NA
Age at procedure, y		
49-54	1.00	NA
55-59	0.93 (0.91-0.94)	<.001
60-64	0.93 (0.92-0.95)	<.001
65-69	0.99 (0.96-1.00)	.03
70-75	1.18 (1.16-1.20)	<.001
Fiscal year		
1998	1.00	NA
1999	0.98 (0.95-1.00)	.05
2000	0.94 (0.92-0.97)	<.001
2001	0.88 (0.86-0.90)	<.001
2002	0.87 (0.85-0.88)	<.001
2003	0.83 (0.81-0.84)	<.001

Abbreviations: See Table 2.

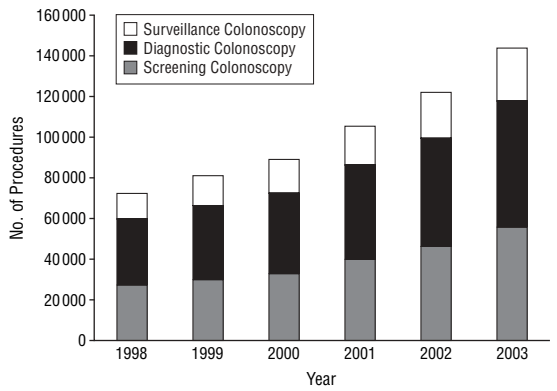

Figure 4. The annual frequency and indications of colonoscopy performed at Department of Veterans Affairs facilities between October 1, 1997, and September 30, 2003. The indications for the procedures were defined according to the algorithm in Figure 1, adjusted for the accuracy of this algorithm estimated from the medical record validation study.

studies. The explanation and the consequences of this difference are unclear and deserve further study. Based on recommendations from various organizations, the Veterans Health Administration[28] recommends the following:

> all eligible veterans at average or high risk for CRC need to be offered CRC screening. Given that each modality has advantages and disadvantages and that none has clearly been proven to be superior, the choice of specific screening strategy (absent medical contraindications to a particular method) needs to be based on patient preferences. The practitioner may recommend any one of the five screening options, but the veteran has the option of rejecting the recommended method and instead choosing one of the five alternatives, or none of the alternatives.

Table 5. Frequency of All VA Users Between the Ages of 49 and 75 Years From October 1, 1997, Through September 30, 2003

Fiscal Year	Frequency	Age, Mean (SD), y
1998	1 835 039	62.6 (8.4)
1999	1 965 135	62.5 (8.4)
2000	2 145 785	62.5 (8.3)
2001	2 421 799	62.7 (8.2)
2002	2 673 927	62.7 (8.1)
2003	2 833 240	62.6 (7.9)

Abbreviation: VA, Veterans Affairs.

The degree or the quality to which this policy is applied in practice is unknown. To our knowledge, there is no universally adopted mechanism of offering the pros and cons of screening choices to the patient in an impartial way (eg, a booklet) before discussion with the provider.

Possible explanations for the disproportionate use of FOBT include specific local VA policy that endorsed FOBT, limited availability of more invasive tests, and inadequate number of VA colonoscopists. More resources are likely to be needed to implement colonoscopy screening compared with FOBT. There are tradeoffs involved with all CRC screening methods, and individuals have different preferences for screening methods. Thus, use is likely to be maximized if individuals can make informed choices about their preferred screening method. Indeed, VA patients who are also Medicare eligible may be obtaining their screening colonoscopy procedures and other services outside the VA under Medicare financing. Last, because the study only included data through 2003, it is possible that by 2006 much more screening colonoscopy is being done through the VA.

Although not addressed directly in this study, the findings are relevant to the issue of current and future endoscopic capacity in the VA. Limited endoscopic capacity in the VA is an explanation of these findings that needs to be examined. Given the substantial number of nonscreening colonoscopies, presumably many colonoscopies are being generated because of positive results on less invasive testing, such as FOBT. In addition, many surveillance colonoscopies are being done. It is not clear whether an FOBT-based program will in the long run result in a reduction of endoscopic procedures. The number of VA users between the ages of 49 and 75 years has increased by more than 55% between 1998 and 2003 (**Table 5**). Colorectal cancer screening was conducted in 19% to 31% of registered VA users in any given year during the study period. Although a significant proportion of VA users may receive additional health care elsewhere, under Medicare financing,[29] and another undefined proportion might have a comorbidity that obviated the need for CRC screening, it is still likely that a substantial number of VA users will be subjected to CRC screening in VA facilities.

Apart from the advantages of colonoscopy previously described, the effectiveness of an FOBT-based

©2006 American Medical Association. All rights reserved.

Downloaded From: http://archinte.jamanetwork.com/ on 01/24/2017

screening program in clinical settings (as opposed to clinical trials) is unclear.[18] The predominant use of FOBT for CRC screening in the VA, while strikingly different from other health care systems in the United States, may not necessarily lead to worse outcomes in terms of CRC-related incidence and mortality. It does, however, call for closer examination of the process and outcomes of this practice in VA settings.

We recognize several potential limitations of this study. First, the accuracy of procedural codes for CRC screening tests in general or in the VA system in particular has not been extensively validated. In studies[30,31] of inpatient claims, the accuracy of endoscopic procedure coding has been high, although analogous data for outpatient procedures or nonendoscopic tests are not available. However, the accuracy of procedural codes in general is thought to be high.[32,33]

Second, we limited the age of the study population to 49 to 75 years in an attempt to target guidelines concordant to the study population. The study did not address CRC screening that is likely to occur to some extent outside the bounds of guidelines. Third, we used a logical algorithm to define the indications for the procedures based on our understanding of the clinical scenarios surrounding these procedures. We tested the validity of the algorithm for screening colonoscopy against information obtained from medical records, and we found the algorithm to be of acceptable accuracy. We also allowed for variations in the definition of screening colonoscopy based on the findings of the validation study. These sensitivity analyses had little effect on the overall observed trends. Whether the timing and indications of these procedures are appropriate given the findings on the previous examination cannot be addressed from the present study.

In summary, we have reported temporal trends in CRC screening procedure use in the national VA system that are somewhat different from findings of non-VA systems. Although the overall use of screening seems to have increased, it is most accounted for by increments in the use of FOBT. We speculate that some of these differences may be accounted for by patient preferences and characteristics of the health care systems, including endoscopic capacity and financial incentives.[33] Further studies should elucidate the underlying reasons for these differences and compare patient outcomes across systems.

Accepted for Publication: July 19, 2006.
Correspondence: Hashem B. El-Serag, MD, MPH, Houston Center for Quality of Care and Utilization Studies, Michael E. DeBakey VA Medical Center, 2002 Holcombe Blvd (152), Houston, TX 77030 (hasheme@bcm.tmc.edu).
Author Contributions: *Study concept and design:* El-Serag, Petersen, Hampel, and Cooper. *Acquisition of data:* El-Serag. *Analysis and interpretation of data:* El-Serag, Petersen, Hampel, Richardson, and Cooper. *Drafting of the manuscript:* El-Serag. *Critical revision of the manuscript for important intellectual content*: El-Serag, Petersen, and Cooper. *Statistical analysis:* Richardson. *Administrative, technical, and material support:* El-Serag. *Study supervision:* El-Serag.
Financial Disclosure: None reported.
Funding/Support: This study was supported by grant RCD 00-013-2 from the VA Health Services Research and Development (Dr El-Serag), grant 045444 from the Robert Wood Johnson Foundation, grant 0540043N from the American Heart Association (Dr Petersen), and grant K05 CA90677 from the National Cancer Institute. Dr Petersen is a Robert Wood Johnson Foundation Generalist Physician Faculty Scholar, and Dr Cooper is an Established Investigator in Cancer Prevention, Control, and Population Science at the National Cancer Institute.
Role of the Sponsor: The funding bodies had no role in data extraction and analyses, in the writing of the manuscript, or in the decision to submit the manuscript for publication.

REFERENCES

1. Jemal A, Siegel R, Ward E, et al. Cancer statistics, 2006. *CA Cancer J Clin*. 2006; 56:106-130.
2. Mandel JS, Bond JH, Church TR, et al. Reducing mortality from colorectal cancer by screening for fecal occult blood. *N Engl J Med*. 1993;328:1365-1371.
3. Mandel JS, Church TR, Ederer F, Bond JH. Colorectal cancer mortality: effectiveness of biennial screening for fecal occult blood. *J Natl Cancer Inst*. 1999; 91:434-437.
4. Hardcastle JD, Chamberlain JO, Robinson MH, et al. Randomised controlled trial of faecal-occult-blood screening for colorectal cancer. *Lancet*. 1996;348:1472-1477.
5. Kronborg O, Fenger C, Olsen J, Jorgensen OD, Sandergaard O. Randomised study of screening for colorectal cancer with faecal-occult-blood test. *Lancet*. 1996; 348:1467-1471.
6. Mandel JS, Church TR, Bond JH, et al. The effect of fecal occult-blood screening on the incidence of colorectal cancer. *N Engl J Med*. 2000;343:1603-1607.
7. Selby JV, Friedman GD, Quesenberry CP Jr, Weiss NS. A case-control study of screening sigmoidoscopy and mortality from colorectal cancer. *N Engl J Med*. 1992;326:653-657.
8. Newcomb PA, Norfleet RG, Storer BE, Surawicz TS, Marcus PM. Screening sigmoidoscopy and colorectal cancer mortality. *J Natl Cancer Inst*. 1992;84:1572-1575.
9. Winawer SJ, Zauber AG, Ho MN, et al. Prevention of colorectal cancer by colonoscopic polypectomy. *N Engl J Med*. 1993;329:1977-1981.
10. Winawer SJ, Fletcher RH, Miller L, et al. Colorectal cancer screening: clinical guidelines and rationale. *Gastroenterology*. 1997;112:594-642.
11. Winawer S, Fletcher R, Rex D, et al; Gastrointestinal Consortium Panel. Colorectal cancer screening and surveillance: clinical guidelines and rationale: update based on new evidence. *Gastroenterology*. 2003;124:544-560.
12. Rex DK, Johnson DA, Lieberman DA, Burt RW, Sonnenberg A. Colorectal cancer prevention 2000: screening recommendations of the American College of Gastroenterology. *Am J Gastroenterol*. 2000;95:868-877.
13. Harewood GC, Lieberman DA. Colonoscopy practice patterns since introduction of Medicare coverage for average-risk screening. *Clin Gastroenterol Hepatol*. 2004; 2:72-77.
14. Prajapati DN, Saeian K, Binion DG, et al. Volume and yield of screening colonoscopy at a tertiary medical center after change in Medicare reimbursement. *Am J Gastroenterol*. 2003;98:194-199.
15. Cram P, Fendrick AM, Inadomi J, Cowen ME, Carpenter D, Vijan S. The impact of a celebrity promotional campaign on the use of colon cancer screening. *Arch Intern Med*. 2003;163:1601-1605.
16. Cooper GS, Koroukian SM. Geographic variation in the use of colorectal procedures in Medicare beneficiaries. *Am J Gastroenterol*. 2004;99:1544-1550.
17. Ko CW, Kreuter W, Baldwin L-M. Effect of Medicare coverage on the use of invasive colorectal cancer screening tests. *Arch Intern Med*. 2002;162:2581-2586.
18. Etzioni DA, Yano EM, Rubenstein LV, et al. Measuring the quality of colorectal cancer screening: the importance of follow-up. *Dis Colon Rectum*. 2006;49: 1002-1010.
19. Veterans Health Administration and the Allocation Resource Center. FY 2005 Veterans Equitable Resource Allocation (VERA) briefing book. vaww.arc.med.va.gov/references/vera05_book/2005_vera_book.pdf>. Accessed August 31, 2006.

©2006 American Medical Association. All rights reserved.

Downloaded From: http://archinte.jamanetwork.com/ on 01/24/2017

20. Centers for Disease Control and Prevention (CDC). *Behavioral Risk Factor Surveillance System Survey Data*. Atlanta, Ga: Centers for Disease Control and Prevention, US Dept of Health and Human Services; 2004.
21. Collins JF, Lieberman DA, Durbin TE, Weiss DG. Accuracy of screening for fecal occult blood on a single stool sample obtained by digital rectal examination: a comparison with recommended sampling practice. *Ann Intern Med*. 2005; 142:81-85.
22. Lang CA, Ransohoff DF. Fecal occult blood screening for colorectal cancer: is mortality reduced by chance selection for screening colonoscopy? *JAMA*. 1994; 271:1011-1013.
23. Lieberman DA, Weiss DG, Bond JH, Ahnen DJ, Garewal H, Chejfec G. Use of colonoscopy to screen asymptomatic adults for colorectal cancer. *N Engl J Med*. 2000; 343:162-168.
24. Imperiale TF, Wagner DR, Lin CY, Larkin GN, Rogge JD, Ransohoff DF. Risk of advanced proximal neoplasms in asymptomatic adults according to the distal colorectal findings. *N Engl J Med*. 2000;343:169-174.
25. Rabeneck L, Davila JA, El-Serag HB. Is there a true "shift" to the right in the incidence of colorectal cancer? *Am J Gastroenterol*. 2003;98:1400-1409.
26. Gupta AK, Melton LJ III, Petersen GM, et al. Changing trends in the incidence, stage, survival and screen-detection of colorectal cancer: a population-based study. *Clin Gastroenterol Hepatol*. 2005;3:150-158.
27. Cooper GS, Yuan Z, Landefeld CS, Johanson JF, Rimm AA. A national population-based study of incidence of colorectal cancer and age. *Cancer*. 1995;75:775-781.
28. Perlin JB. IL 10-2005-009: Under Secretary for Health's Information Letter: Colorectal Cancer Screening. www1.va.gov/vhapublications/ViewPublication.asp?pub_ID=1263. Accessed August 31, 2006.
29. Byrne M, Kuebeler M, Pietz K, Petersen LA. Effect of using information from only one system for dually eligible health care users. *Med Care*. 2006;44:768-773.
30. Cooper GS, Yuan Z, Stange KC, Dennis LK, Amini SB, Rimm AA. Agreement of Medicare claims and tumor registry data for assessment of cancer-related treatment. *Med Care*. 2000;38:411-421.
31. Cooper GS, Chak A, Lloyd LE, Hammar PJ, Harper DL, Rosenthal GE. The accuracy of diagnosis and procedural codes for patients with upper gastrointestinal hemorrhage. *Gastrointest Endosc*. 2000;51:423-426.
32. Fisher ES, Whaley FS, Krushat WM, et al. The accuracy of Medicare's hospital claims data: progress has been made, but problems remain. *Am J Public Health*. 1992;82:243-248.
33. Petersen LA, Wright SM, Normand SLT, Daley J. Positive predictive value of the diagnosis of acute myocardial infarction in an administrative database. *J Gen Intern Med*. 1999;14:555-558.
34. Petersen LA, Woodard LD, Urech T, Daw C, Sookanan S. Does pay-for-performance improve the quality of health care? *Ann Intern Med*. 2006;145: 265-272.

©2006 American Medical Association. All rights reserved.

Downloaded From: http://archinte.jamanetwork.com/ on 01/24/2017